MP SENSOR

Product category	Type	Version
PRESSURE TRANSMITTER	INLINE ANALOG	STANDARD

DATA SHEET | *ENGLISH*

DIMENSION DRAWING

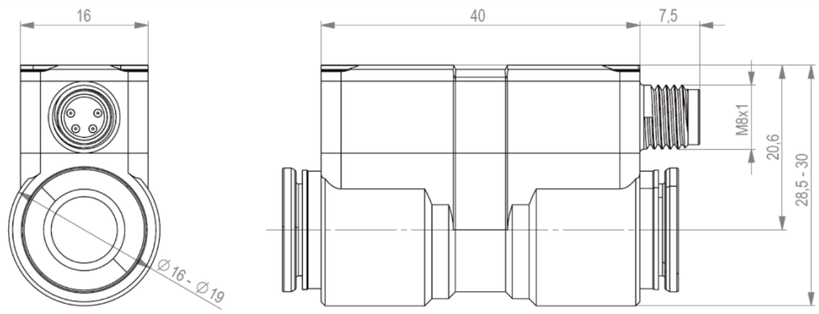

ELECTRICAL CONNECTION

Pin	Assignment
1	Ub+
3	0 V
4	OUT 1
2	NC

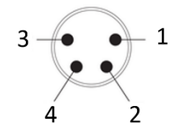

General data

Operating medium	Filtered, dry or oiled air and non-corrosive gases
Protection class	IP40/IP68
MTTF (40°C)	2,176 years (4-20mA) 2,528 years (0-10V / 1-10V/1-5V)

Ordering information

1 - 08 - XX X1 - XX 0 X 00

Process connection

hose connection Ø4mm	14
hose connection Ø6mm	07
hose connection Ø8mm	15
hose connection Ø10mm	16

Protection class

IP40	5
IP68	8

Output signal

4…20 mA	07
0…10 V	09
1…10 V	10
1…5 V	11

Pressure range

bar	psi	
-1…0	-14.5…0	1
-1…1	-14.5…14.5	2
-1…10	-14.5…145	3
0…10	0…145	4
0…12	0…174	5
-1…3	-14.5…43.5	6
0…0.25	0…3.625	8

Mechanical data

Material housing	Plastic PBT/PC
Process connection	Push-in 4/6/8/10 mm
Mounting position	Any
Weight	approx. 20 g (4/6mm) approx. 30 g (8/10mm)

Electrical data

Electrical connection	M8x1, 4-pole; M12x1, 4-pole
Operating voltage	9…30 VDC (4…20 mA); 14…30 VDC (1…10 V; 0…10 V; 1…5V)
Short-circuit / reverse polarity protection	yes / yes
Output signal	4…20 mA; 1…10 V; 0…10 V; 1…5 V
Accuracy (23°C)	± 0.5% BTLS
max. temperature error	± 1.5% FS (-10°C…70°C)
Repeatability	± 0.2% FS
Long term drift	≤ 0.1% / a

Pressure range

Measuring range							
(bar)	0…0.25	-1…0	-1…1	-1…3	-1…10	0…10	0…12
(psi)	0…3.26	-14.5…0	-14.5…14.5	-14.5…43.5	-14.5…145	0…145	0…174
max. overpressure*							
(bar)	0.5	2		6	15		
(psi)	7.25	29		87	217.6		

Operating conditions

Operating temperature	Operation: -10°…+60°C Storage: -20°…+85°C
EMC / interference immunity	EN61000-6-2
EMC / interference emission	EN61000-6-4

*overpressure not continuously allowed