Panasonic
ideas for life

AC Fan Motor	80 sq.×38t (ASEN8)

NEW

RoHS Directive compatibility information
http://www.nais-e.com/

DIMENSIONS (mm inch)

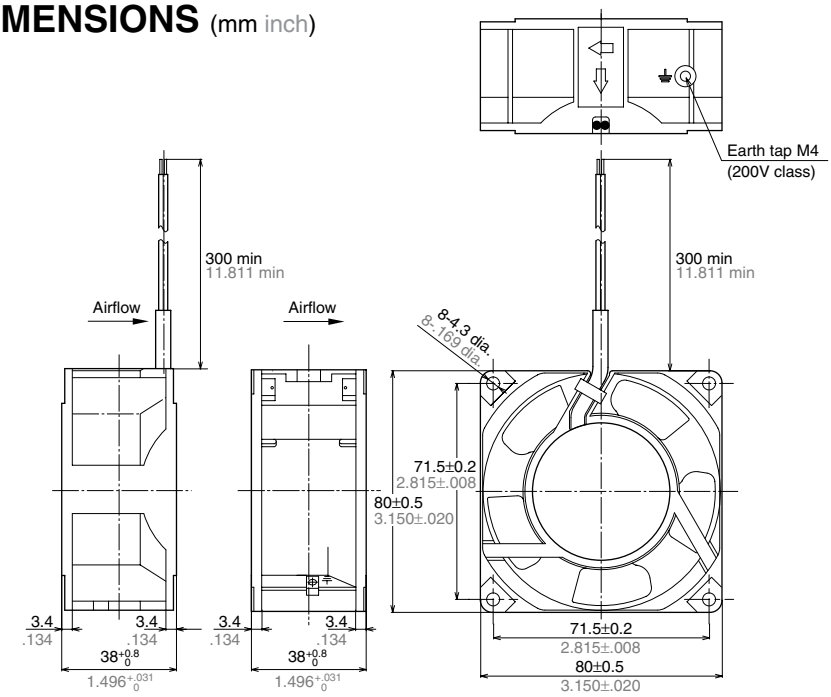

Lead wire type 2 terminals type

RATING

1. Lead wire type, Standard speed

Part number	Rated voltage (V)	Frequency (Hz)	Input power, +10 -20 % (W)	Rated current*1 (mA)	Locked current*3 (mA)	Rotation speed*2 (r/min)	Max. air flow*2 (m³/min)	Max. static pressure*2 (Pa)	Noise*3 (dB(A))	Operating voltage range (V) (%)	Weight (kg)
ASEN80411	100	50/60	9/7	170/120	180/160	2700/3200	0.75/0.9	44.2/62.8	33/38 (36/42)	±10	0.3
ASEN80412	115			140/110	160/140						
ASEN80414	200			80/65	90/80						
ASEN80416	230		10/8	70/55	80/70						

2. 2 terminals type, Standard speed

Part number	Rated voltage (V)	Frequency (Hz)	Input power, +10 -20 % (W)	Rated current*1 (mA)	Locked current*3 (mA)	Rotation speed*2 (r/min)	Max. air flow*2 (m³/min)	Max. static pressure*2 (Pa)	Noise*3 (dB(A))	Operating voltage range (V) (%)	Weight (kg)
ASEN804519	100	50/60	9/7	170/120	180/160	2700/3200	0.75/0.9	44.2/62.8	33/38 (36/42)	±10	0.3
ASEN804529	115			140/110	160/140						
ASEN804549	200			80/65	90/80						
ASEN804569	230		10/8	70/55	80/70						

*1: Designates maximum values, *2: Designates minimum values, *3: Designates average values
Notes: 1. Values above without designations are averages.
2. Noise level was measured at a distance of 1 m from side of fan. Values in brackets were measured at a distance of 1 m from front of fan.

DATA (Airflow - Static pressure Characteristic Curve)

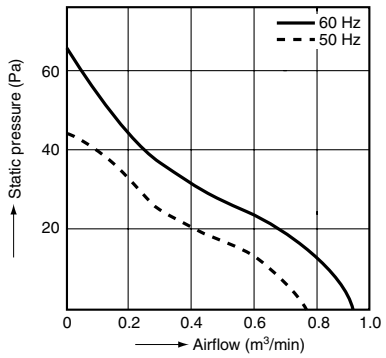

MATERIALS USED

Frame: aluminum alloy die-casting
Propeller: plastic
Bearings: ball bearings
Lead wires: UL3266 and AWG22
Terminal: Equivalent to Faston #110
Label: 100 V class...black base
200 V class...red base

SPECIFICATIONS

Ambient temperature		–10°C to +60°C +14°F to +140°F
Ambient humidity		15 to 85%RH
Storage temperature		–20°C to +70°C –4°F to +158°F
Breakdown voltage		1,500 V AC for 1 min. (between charging section and frame)
Insulation resistance		Min. 100MΩ (at 500 V DC megger)(between charging section and frame)
Insulation class		UL:A class, CSA:B class
Vibration resistance	Frequency	10 to 55Hz
	Double amplitude width	0.75mm
	Applied direction	X, Y and Z directions
	Applied time	10 min. in each direction
Protection		Impedance protected
Mean life		MTTF: 50,000 hrs. (Time it takes until rotation frequency drops 30% of initial value when run continuously under 25°C 77°F and room humidity at the nominal voltage.)

SENTRONIC AG 056 222 38 18 mailbox@sentronic.com www.sentronic.com